TOP

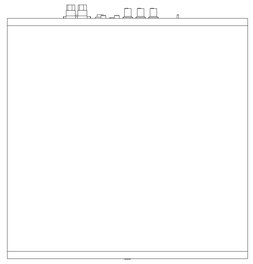

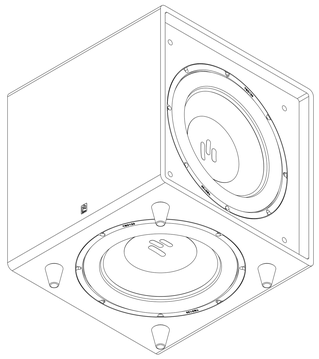

SIDE

FRONT (GRILLE ON)

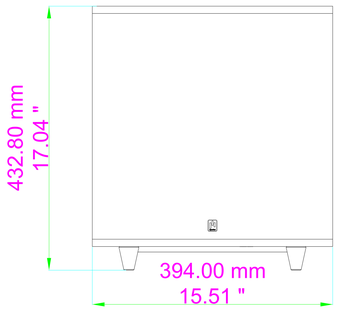

FRONT (GRILLE OFF)

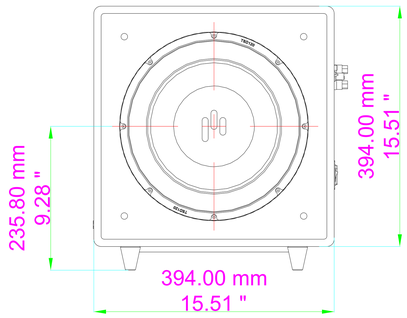

REAR

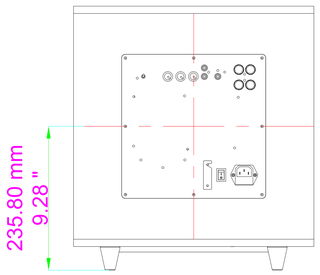

BOTTOM

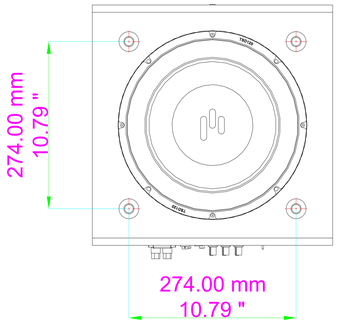

Bravus B12D

aperionaudio.com

www.aperionaudio.com
customerservice@aperionaudio.com

COPYRIGHT APERION AUDIO
21/06/2019

ANGLE