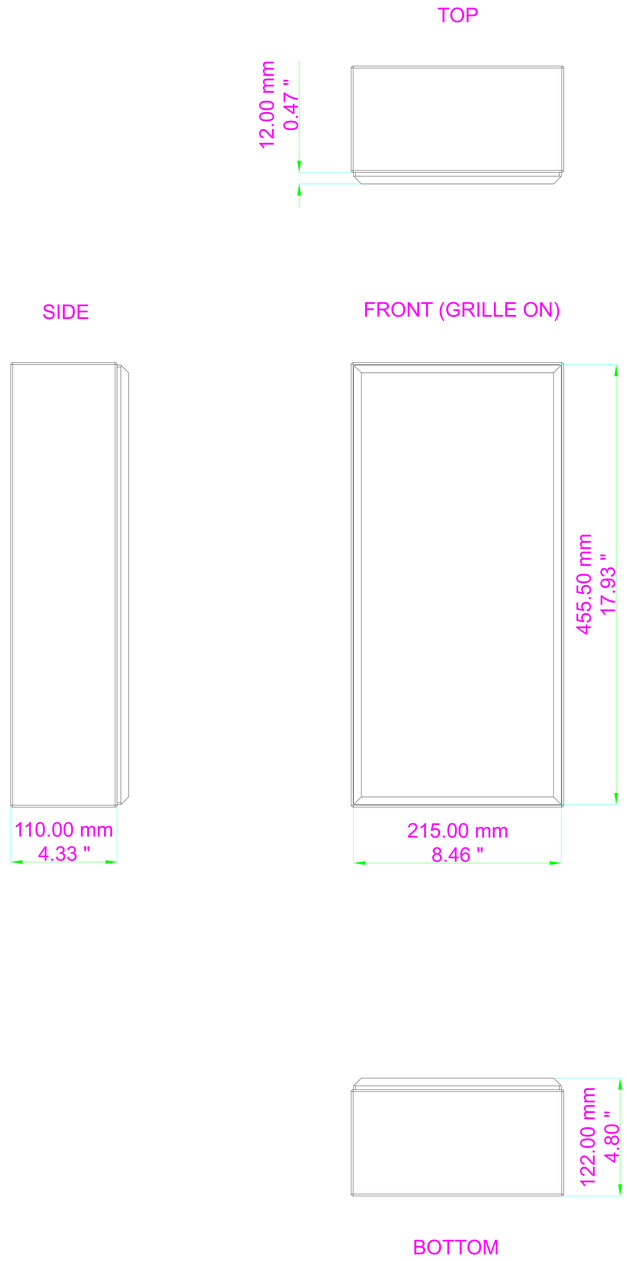

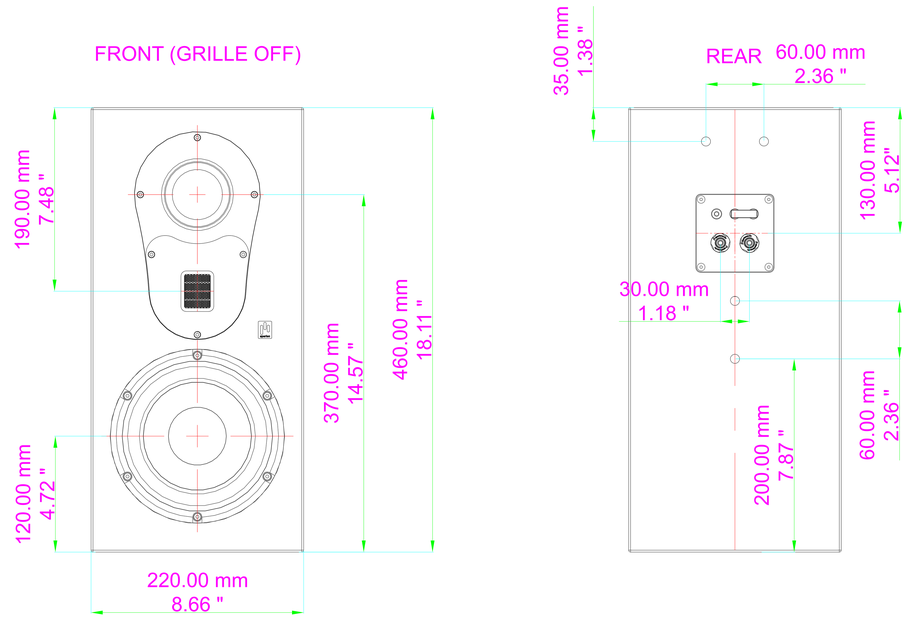

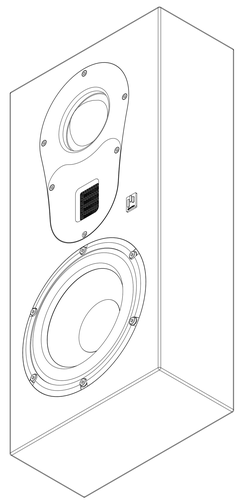

Theatrus T63S

aperionaudio.com

www.aperionaudio.com
customerservice@aperionaudio.com

COPYRIGHT APERION AUDIO
15/11/2024

ANGLE