TOP

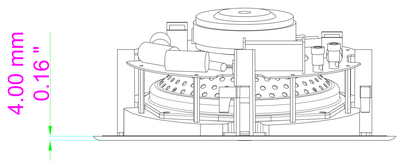

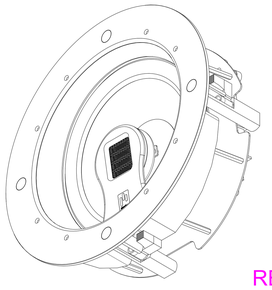

SIDE

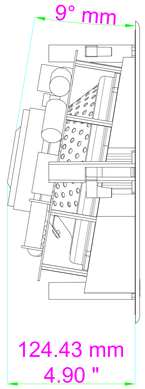

FRONT (GRILLE ON)

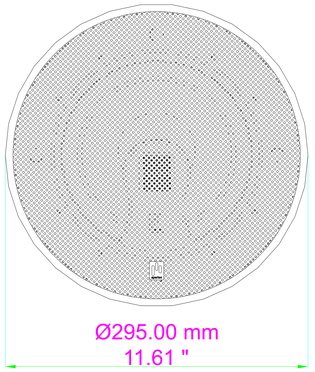

FRONT (GRILLE OFF)

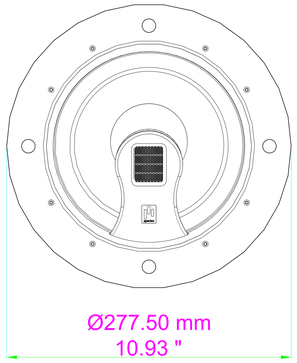

REAR

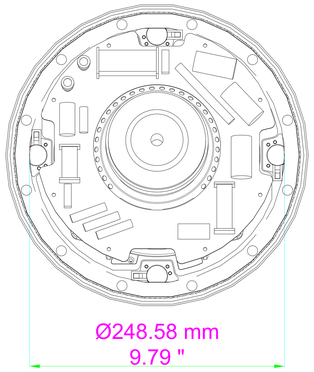

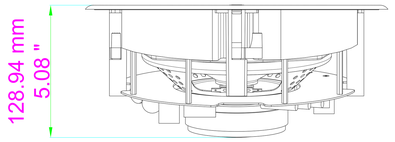

BOTTOM

Theatrus T8C

aperionaudio.com

www.aperionaudio.com
customerservice@aperionaudio.com

COPYRIGHT APERION AUDIO
15/08/2025

ANGLE