TOP

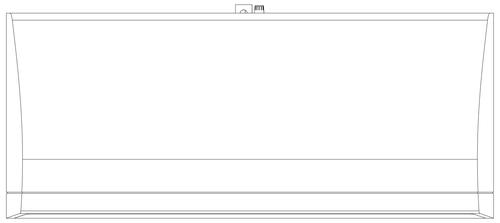

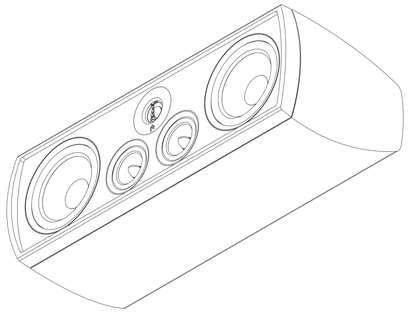

SIDE VIEW

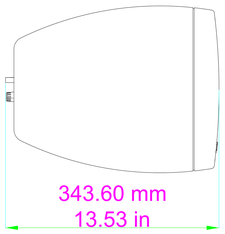

FRONT (GRILLE)

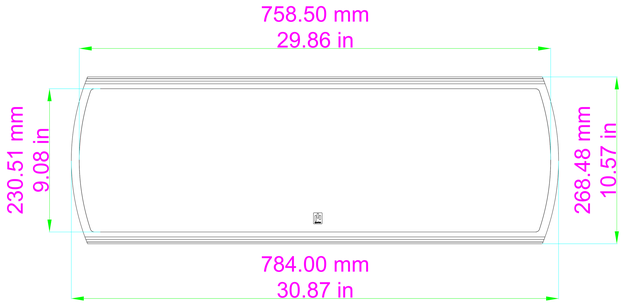

FRONT (NO GRILLE)

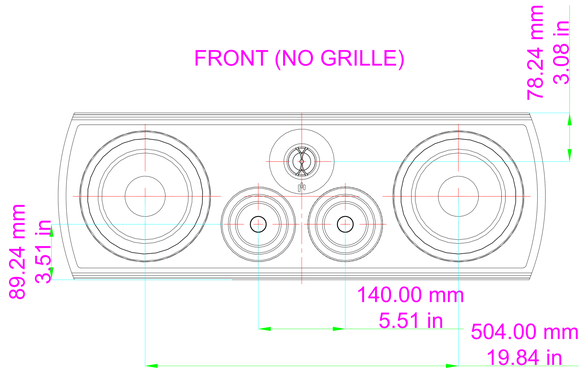

BASE

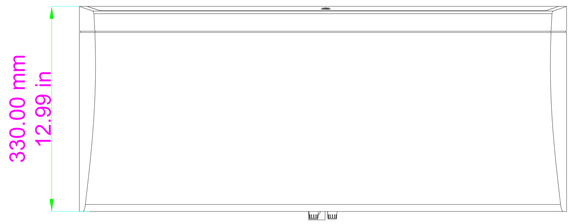

REAR

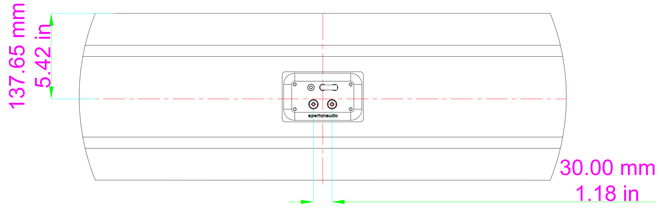

Verus V8C

aperionaudio.com®

www.aperionaudio.com
customerservice@aperionaudio.com

COPYRIGHT APERION AUDIO
21/06/2022

ANGLE