TOP

SIDE VIEW

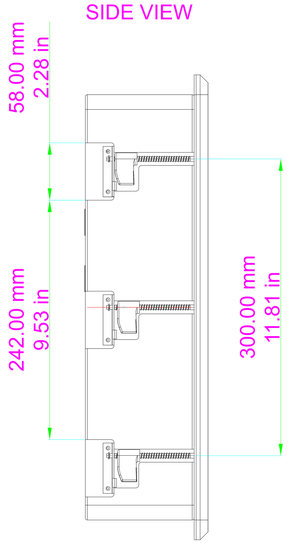

FRONT (GRILLE)

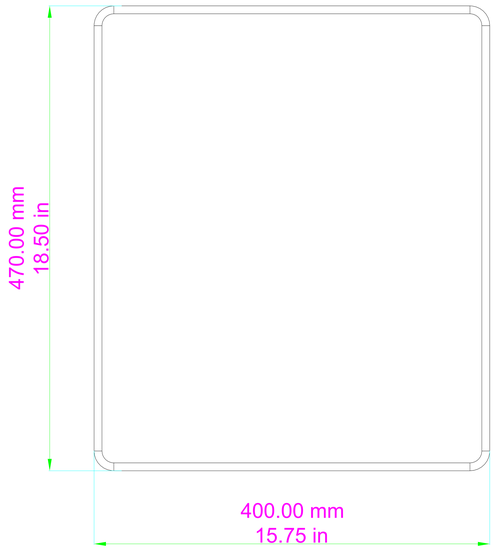

FRONT (NO GRILLE)

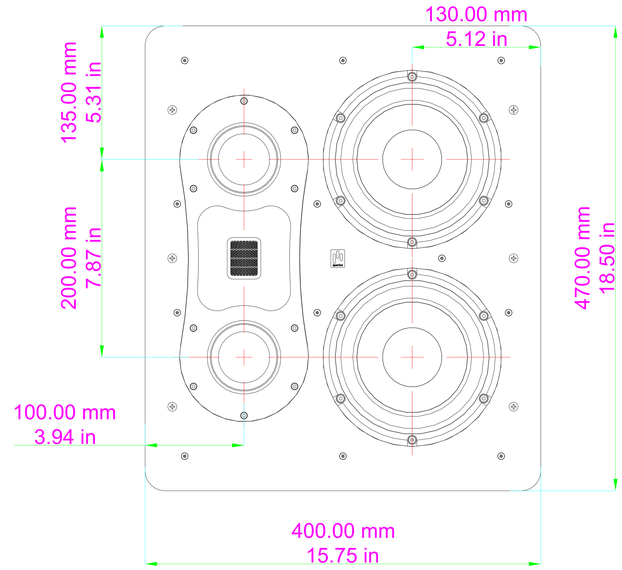

REAR

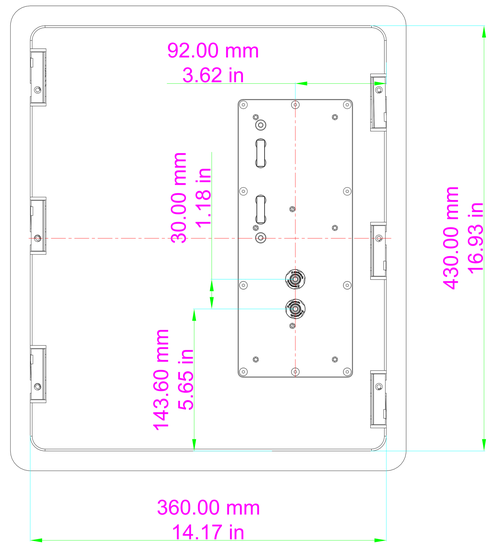

BASE

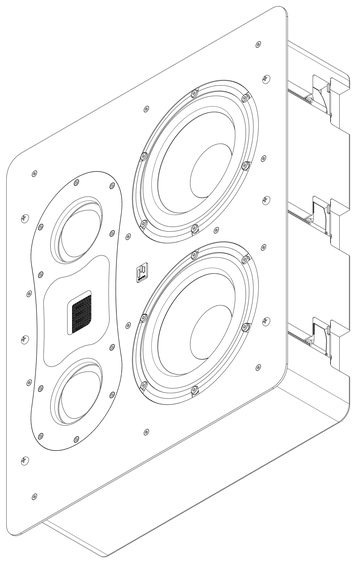

Theatrus T65W

aperionaudio.com

www.aperionaudio.com
customerservice@aperionaudio.com

COPYRIGHT APERION AUDIO
01/06/2022

ANGLE