TOP

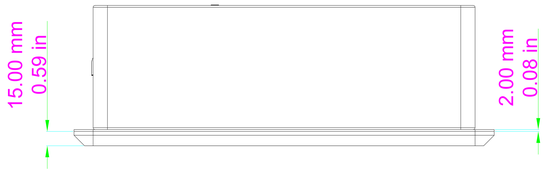

SIDE VIEW

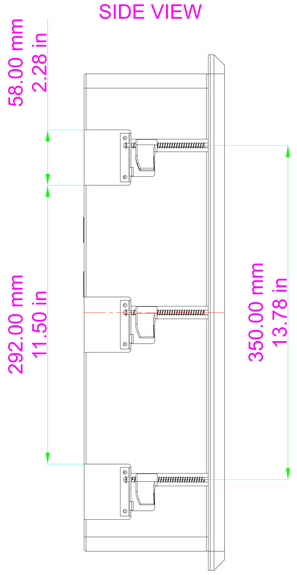

FRONT (GRILLE)

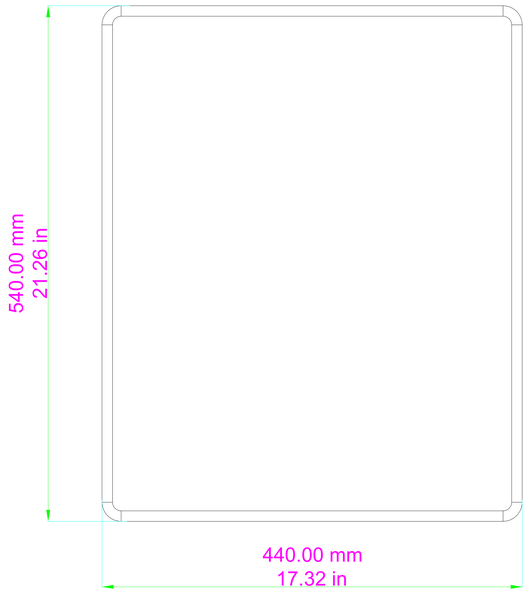

FRONT (NO GRILLE)

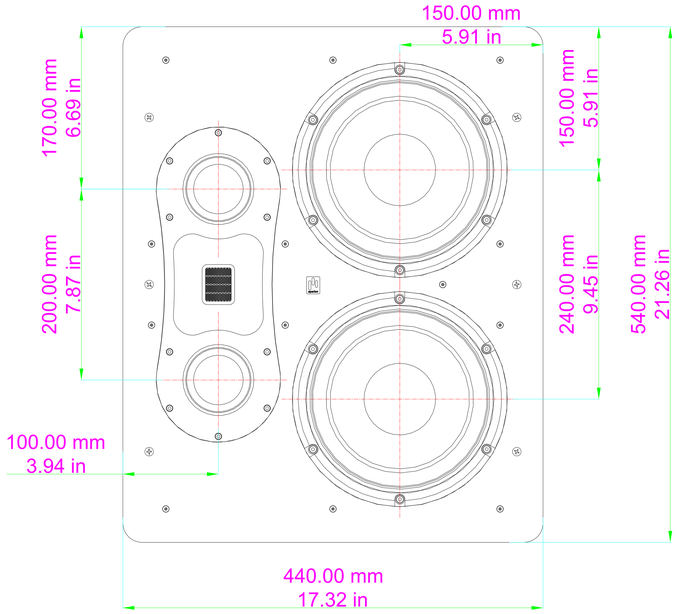

REAR

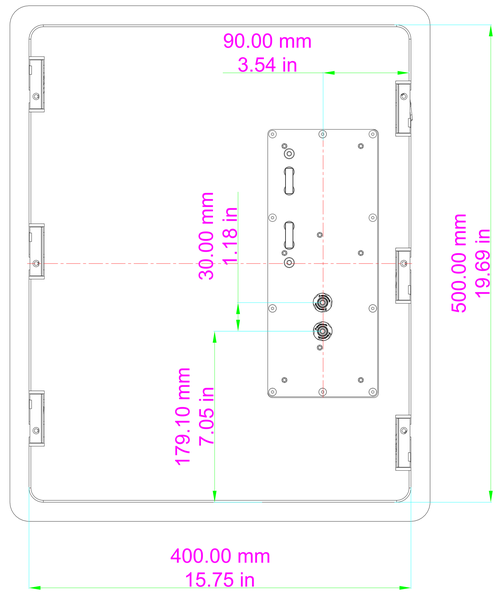

BASE

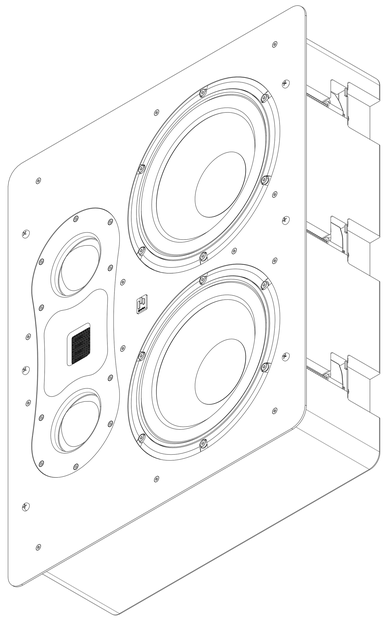

Theatrus T80W

aperionaudio.com®

www.aperionaudio.com
customerservice@aperionaudio.com

COPYRIGHT APERION AUDIO

27/05/2022

ANGLE