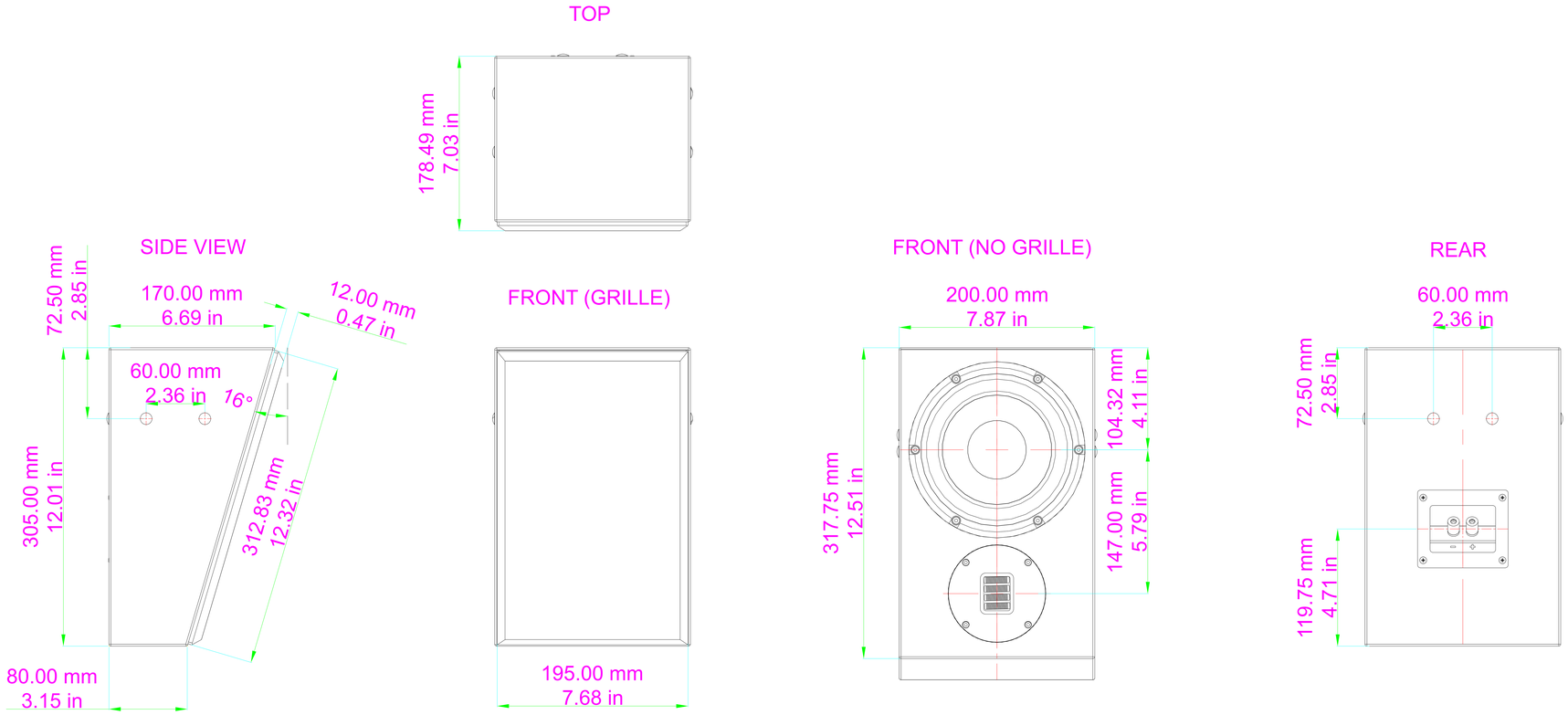

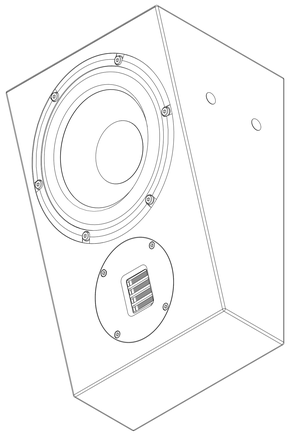

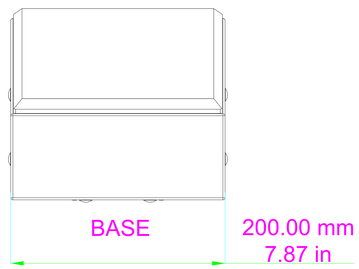

Theatrus TC65

aperionaudio.com®

www.aperionaudio.com
customerservice@aperionaudio.com

COPYRIGHT APERION AUDIO
16/10/2021

ANGLE