TOP

SIDE VIEW

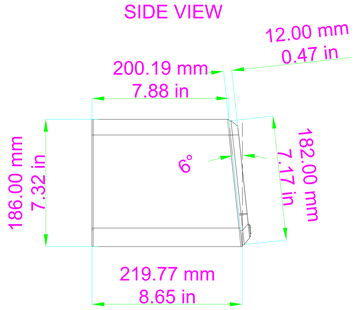

FRONT (GRILLE)

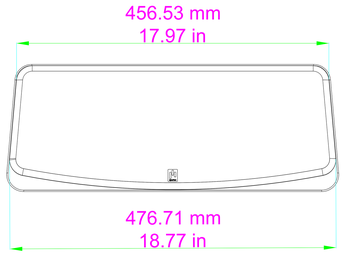

FRONT (NO GRILLE)

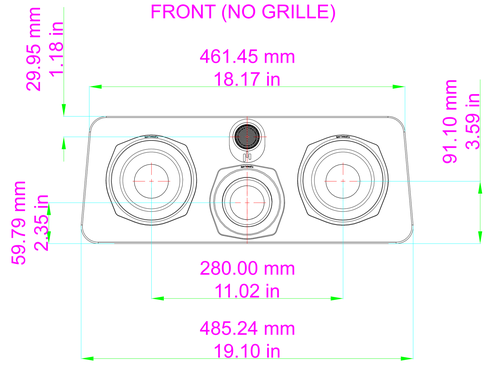

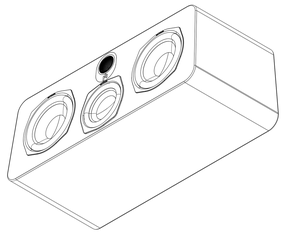

BASE

REAR

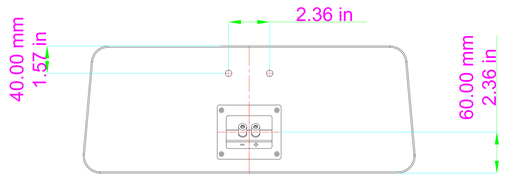

Novus N5C

aperionaudio.com®

www.aperionaudio.com
customerservice@aperionaudio.com

COPYRIGHT APERION AUDIO
28/02/2019

ANGLE